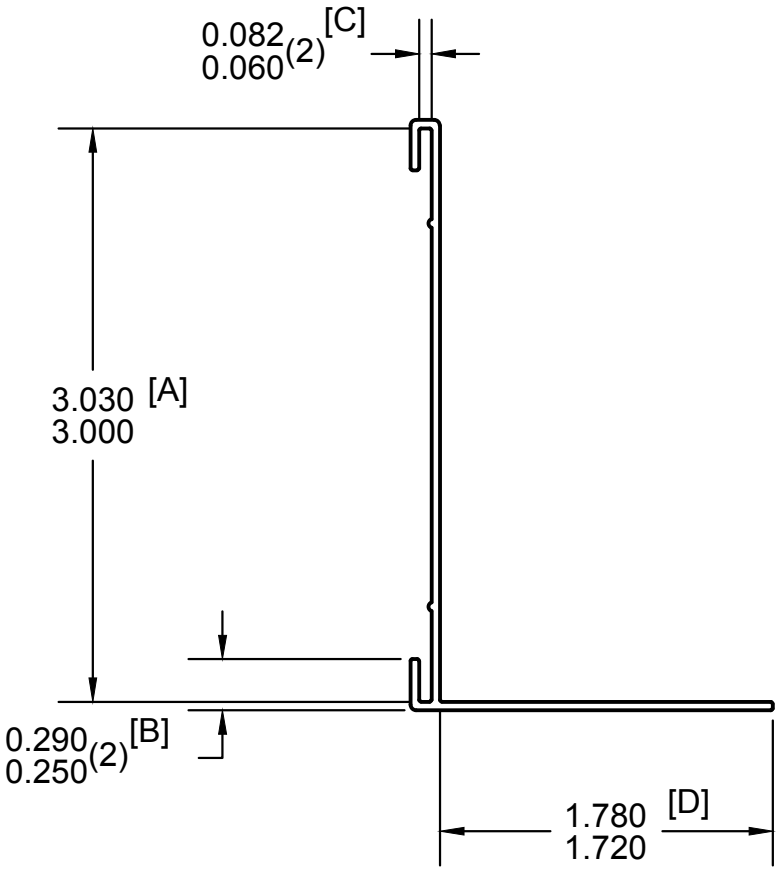

WALL = .045

REV.	DESCRIPTION	MODIFIED BY	DATE
A	.082/.060 WAS .070/.060	SBP	06/03/10

popco inc.
MINNETONKA, MN

3" "C" CHANNEL W/FLANGE

SCALE	PART NO.	SIZE
1:1		A

DRAWN	APPROVED	DATE	DRAWING NO.	REV
SBP		06/03/10	EP2108	A